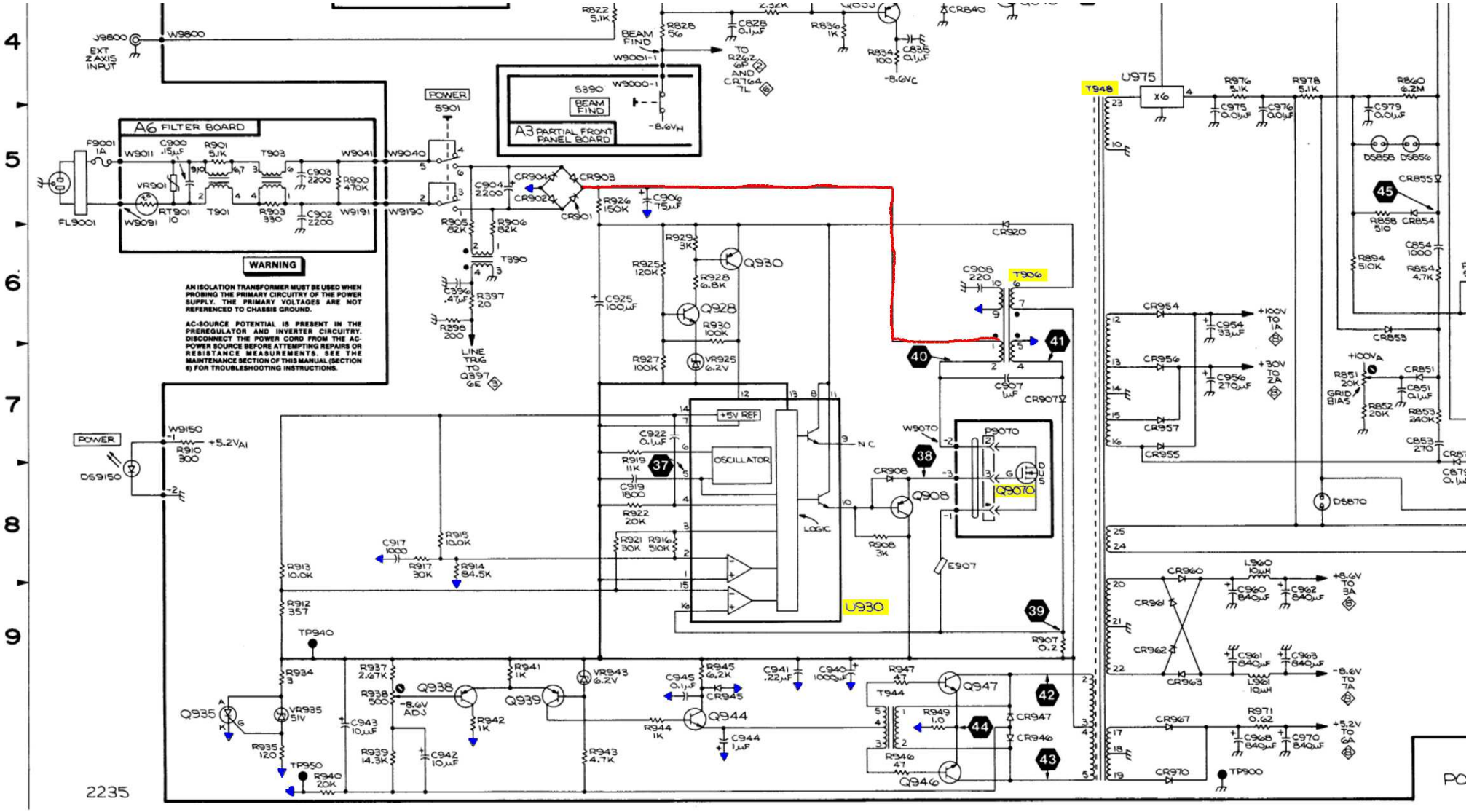
A6 FILTER BOARD
A3 PARTIAL FRONT PANEL BOARD
WARNING
AN ISOLATION TRANSFORMER MUST BE USED WHEN PROBING THE PRIMARY CIRCUITRY OF THE POWER SUPPLY. THE PRIMARY VOLTAGES ARE NOT REFERENCED TO CHASSIS GROUND.
AC-SOURCE POTENTIAL IS PRESENT IN THE PREREGULATOR AND INVERTER CIRCUITRY. DISCONNECT THE POWER CORD FROM THE AC-POWER SOURCE BEFORE ATTEMPTING REPAIRS OR RESISTANCE MEASUREMENTS. SEE THE MAINTENANCE SECTION OF THIS MANUAL (SECTION 6) FOR TROUBLESHOOTING INSTRUCTIONS.
EXT Z AXIS INPUT
BEAM FIND
POWER
OSCILLATOR
LOGIC
+5V REF
U930
U975
2235